ORPU

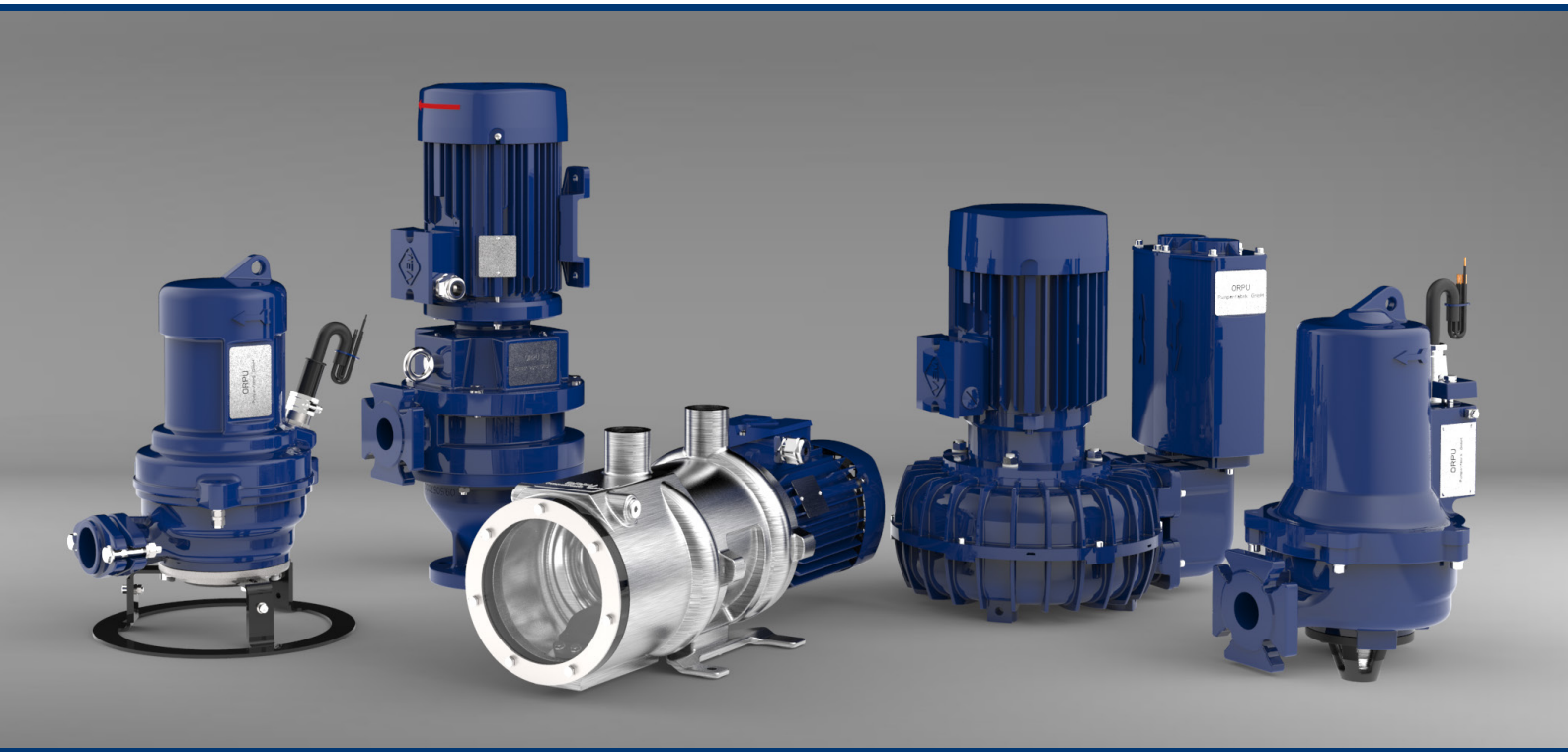

ORPU Pumpenfabrik GmbH - The specialist for niche applications in the waste water technology

ORPU is a specialist for niche applications in the waste water technology. We develop and manufacture high-performance and effective pumps and compressors. People, technology and the environment determine our daily actions.

We want to fulfil the requests of our customers with special and individual solutions. That is why all of our employees consistently think and act with our customers' best interest in mind. Our innovations are not limited to just attractive technical solutions, as we also focus on the longevity and sustainability of our products while optimising the use of resources.

In addition to a range of high-quality pumps and compressors, we also offer dependable project accompaniment and other well-developed services not only in Germany, but all over the world.

Pumps and submersible motor compressors from ORPU Pumpenfabrik GmbH are used in a broad spectrum of applications in modern water disposal and waste water treatment, water supply as well as in ship building and the offshore sector.

Pump production for more than 80 years

In 1936, the company Hellfrich, Oranienburger Pumpenfabrik was founded.

A re-establishing under the name ORPU took place in 1949. The company manufactured and repaired pumps and hydrophor plants.

In 1955, ORPU merged with the company Elektromaschinen- und Apparatebau to VEB Metallwerk Oranienburg. New pumps and compressors were developed and manufactured. At the beginning of the 1970s, the company was integrated in the VEB Kombinat Pumpen und Verdichter Halle.

After changing to a limited liability company in 1990, ORPU was privatized on January 1st, 1993 under the name ORPU Oranienburger Pumpen, Verdichter und Maschinenbau GmbH.

As an affiliated company of oddesse Pumpen- und Motorenfabrik GmbH, ORPU operates under the name ORPU Pumpenfabrik GmbH since 2006.

Sewage pumps
ORCUT ES / MACERATOR PUMPS KM

ORCUT ES

FIELDS OF APPLICATIONS
- ship purification plants
- sewage treatment plants in domestic, municipal and industrial areas
- sewage lifting systems

ADVANTAGES
- reliable shredding of solids contained in transported material
- high operation reliability through cutting system
- stationary use
- full program of accessories available
- cost-efficient installation
- horizontal and vertical use

DESIGN
- single-stage centrifugal pump
- adjustable, hardened cutting system
- motor sealing by single or double mechanical seal
- all motor efficiency classes, insulation class F, degree of protection IP 55
- thermal winding protection
- flange for DN 40 PN 6 and PN 10, DIN 2501
- motor available in ATEX execution

ORCUT ES in bronze design for application on board ships

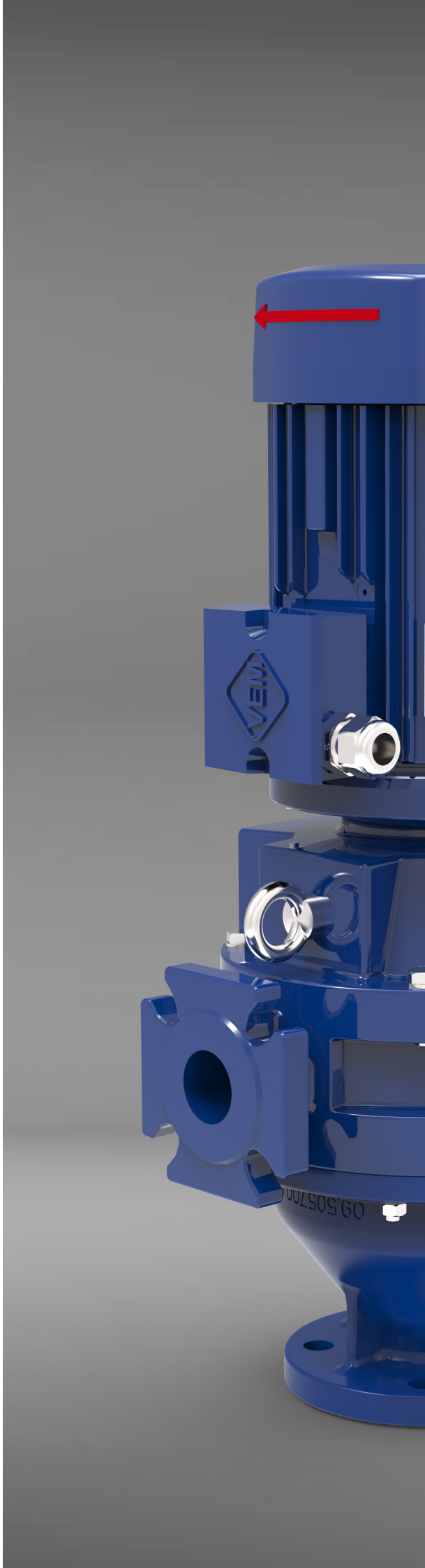

MACERATOR PUMPS KM

FIELDS OF APPLICATIONS

- ship purification plants
- sewage treatment plants in domestic, municipal and industrial areas
- sewage lifting systems

ADVANTAGES

- ensures achievement of smallest particle sizes of 2 mm due to the multiple cutting system
- large performance range by internal pressure control
- horizontal and vertical use
- reliable start-up behaviour even in critical situations
- universal connectivity and set-up options
- full program of accessories available
- cost-efficient installation
- high operation reliability and long service life

DESIGN

- single-stage centrifugal pump
- adjustable, hardened cutting system
- motor sealing by single or double mechanical seal
- all motor efficiency classes, insulation class F, degree of protection IP 55
- temperature protection
- flange for DN 40 PN 6 and PN 10, DIN 2501
- motor available in ATEX execution

three-phase cutting system of Macerator pump KM

Submersible sewage pumps
ORCUT TES / ORCUT TMS

ORCUT TES

FIELDS OF APPLICATIONS
- sewage treatment plants
- pumping stations
- pressure drainage systems
- domestic, municipal and industrial sectors
- disaster control
- setting tanks and overflow basins

ADVANTAGES
- in standard or explosion-proof design
- high operation reliability through cutting system
- stationary or mobil application
- flange applicable for PN 6 and PN 10
- various connection possibilities
    - pipe connection
    - coupling connection
    - hose connection
- cost-efficient installation
- long service life

DESIGN
- vertical, single-stage centrifugal pump
- adjustable, hardened cone cutting system
- motor sealing by mechanical seal independent of direction of rotation
- motor isolation class F, degree of protection IP 68
- thermal winding protection
- all sizes with ATEX certification
- connection cable available up to 30 m

Cone cutting system ORCUT TES

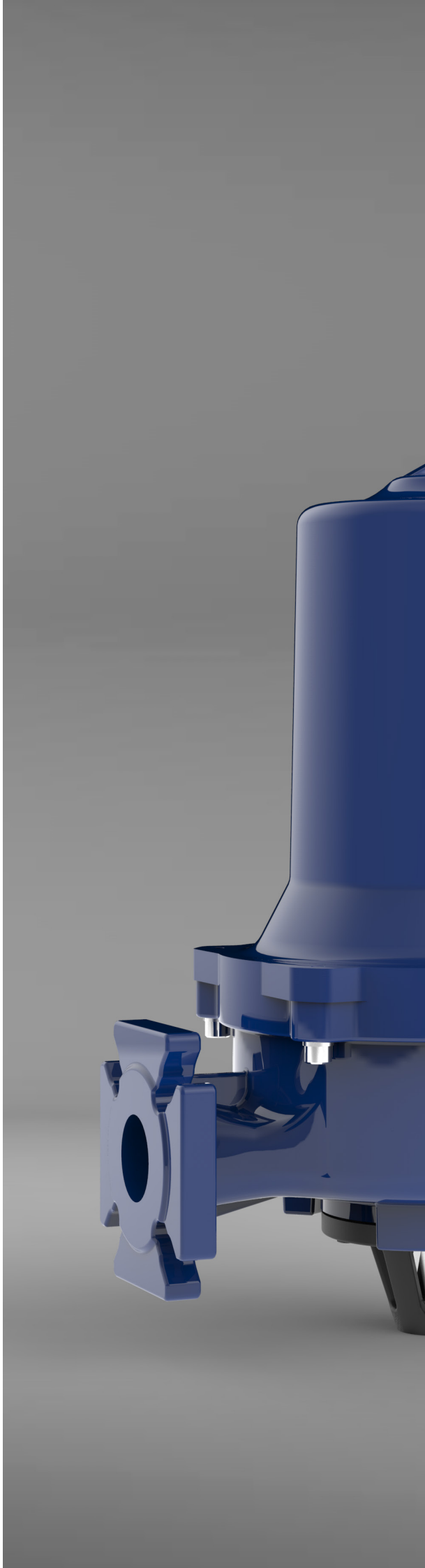

ORCUT TMS

FIELDS OF APPLICATIONS

- sewage treatment plants
- pumping stations
- pressure drainage systems
- domestic, municipal and industrial sectors
- disaster control
- setting tanks and overflow basins

ADVANTAGES

- high operation reliability through scissor-cutting system
- stationary or mobile application
- multi-channel impeller for optimal suction of media
- well suited for abrasive media
- optimised adjustment of cutting blade
- long service life
- quiet pump operation
- cost-efficient installation
- full program of accessories available

DESIGN

- vertical, single-stage centrifugal pump
- adjustable, hardened scissor-cutting system
- motor sealing by mechanical seal independent of direction of rotation
- thermal winding protection
- multichannel impeller
- connection cable available up to 30 m

ORCUT TMS with stand plate

Sewage lifting systems

FIELDS OF APPLICATIONS

- domestic waste water and sewage water
- prefabricated pumping station for property drainage
- prefabricated pumping station for pressure drainage system

ADVANTAGES

- lift and groundwater protection
- suitable for all pumps with cutting system
- pre-finished systems
- automatic level and pump control
- high operational safety and low maintenance
- individual optimization of the system
- optimal combination of the components

DESIGN

- collecting shaft made of synthetic material with an almost deposit-free pump sump
- suitable for all commercial shaft covers class A-D/400
- installation height from 1,700 to 5,000 mm
- diameter from 800 to 1,200 mm
- inlet from DN 100 to DN 150
- pressure pipe 1,5" or 2" completetly preassembled in stainless steel
- all modifications are possible

Control box PS1 - LCD N

Measuring bell

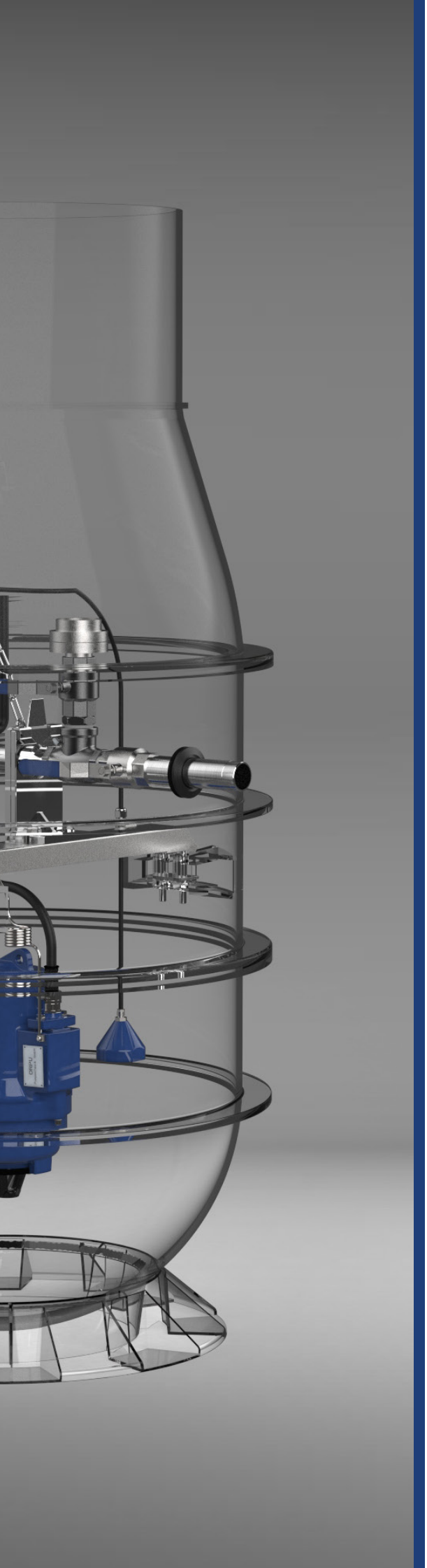

SCOPE OF DELIVERY

- shafts made of concrete or plastic
- pump with cutting system
- control box
- measuring bell
- surface coupling
- pipeline made of stainless steel
- ball valve made of stainless steel
- non-return valve made of stainless steel
- fastening screws, chain, shackle, hooks made of stainless steel
- intake seal IS 160 for KG pipe DN 150
- cable conduit IS 110 for KG pipe DN 100
- shaft cover
- seating rings if required
- shaft extension if required

All pumps with cutting system are suitable for the installation in sewage lifting systems.

Installation of a sewage lifting system

Vacuum pumps ORVACUT

APPLICATION AREAS

- developed for suction systems for dirt and wastewater
- perfect for vacuum toilet systems
- condensate extraction in refrigeration systems
- extraction of brackish water in shipyards

LATEST TECHNOLOGY WITH ENORMOUS ADVANTAGES

- inlet design* ensures reliable closing of the non-return valve
- vacuum remains in the system after shutdown
- no need to refill water after start-up
- safe construction of a water ring
- smooth-running construction
- lubrication of the mechanical seal by oil reservoir

*utility model protection, patent pending

DESIGNATIONS

- available in all voltages and frequencies
- AC power available for ORVACUT 100 and 150
- Hose connection Ø 50, ORVACUT 250 optionally with loose flanges on suction and pressure side
- color according to customer requirements, standard RAL 5002

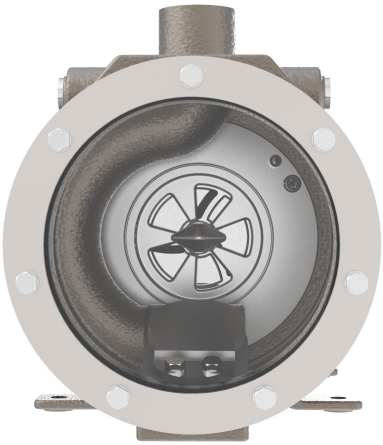

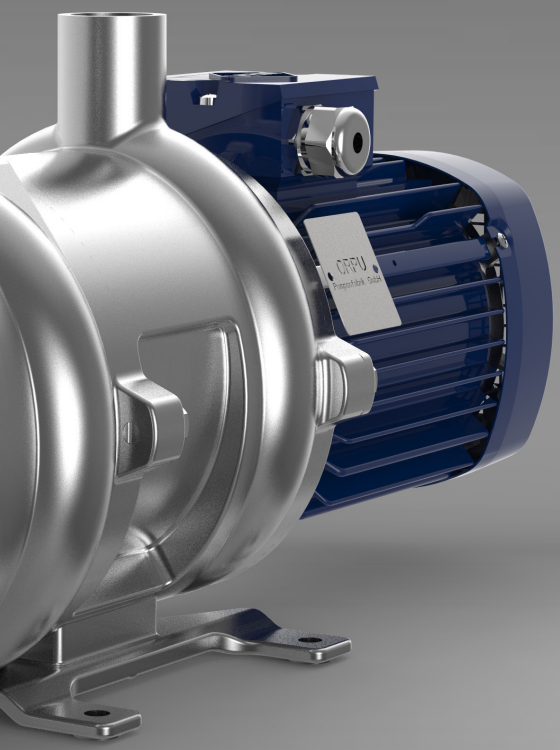

DESIGN FEATURES

- AISI 316 stainless steel investment casting
- available in 6variants
- IE3 motor
- special winding with power factor

PROVEN CUTTING TECHNOLOGY

- cutting system - has been proven for 25 years
- agitator prevents ragging

EASY AND FAST SERVICE

- easy maintenance
- easy replacement of wear parts

Installation of a vacuum pump

Side channel compressors SKV

FIELDS OF APPLICATIONS

- delivery of oil free air
- delivery of neutral technical gases
- used as pressure or vacuum generator

ADVANTAGES

- reliable and variable operation
- optimal performance
- low maintenance
- the number of moving parts is minimized
- easy assembly and disassembly
- low weight
- optimal adaptation to mounting situation

DESIGN

- various technical options available
- coverage of large performance range thanks to a wide selection of sizes
- individual, series or parallel connection possible

Group of side channel compressors

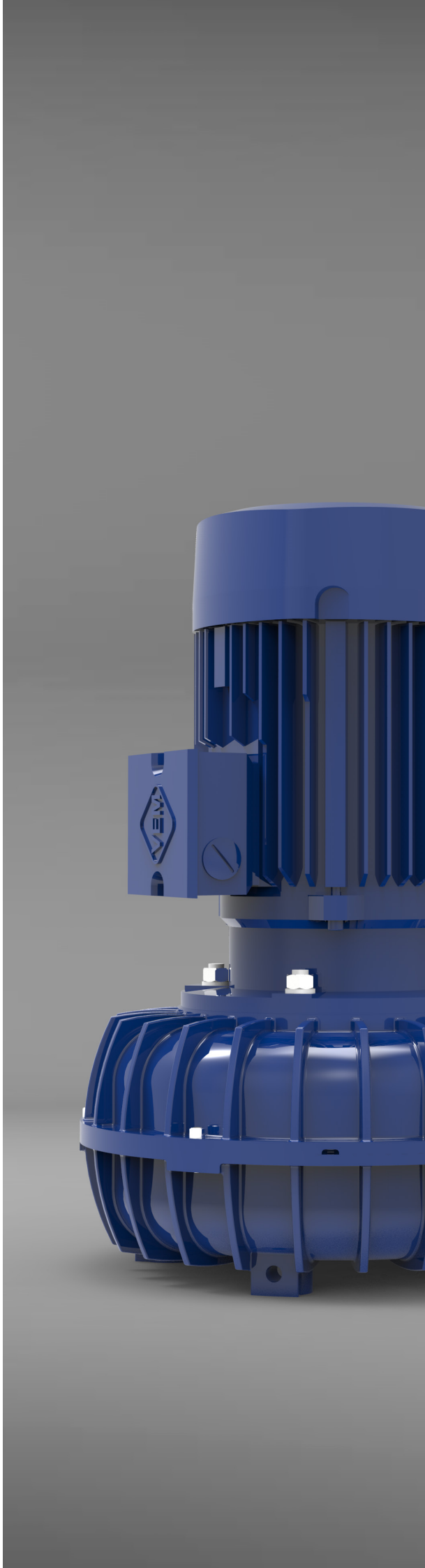

Submersible motor compressors TMV

FIELDS OF APPLICATIONS

- ventilation of treatment plants
- ventilation of contaminated water
- ventilation of aquacultures
- water and sewage water turbulence
- keep pontoons free of ice

ADVANTAGES

- low-noise operation and low-maintenance
- low investment and minimal operating costs
- delivery of oil-free air
- use of waste heat for biological treatment process
- suitable for continuous and intermittent operation as well
- maximum best motor operation due to better cooling behaviour during submersible installation

DESIGN

- submersible side channel compressor up to 5 m immersion depth
- no friction causing seal systems
- motor insulation class F
- degree of protection IP 68
- complete pressure sealed installation including suction and pressure side equipment, protection valve, manometer, check valve and special guide rail system

Installation of TMV

Side channel pumps SK 32

FIELDS OF APPLICATIONS

- applicable in automatic house water supply installations
- irrigation of green areas
- delivery of clear and brakish water without abrasive components in:
    - industry
    - agriculture
    - gardening
    - allotment gardens

ADVANTAGES

- excellent suction performance
- simple construction
- high operational safety and reliability
- special adaptation for the particular application
- saves valuable drinking water

DESIGN

- ring-section design
- 1 product range, 3 sizes
- maximum in 3 stages
- available with three-phase or single-phase motor

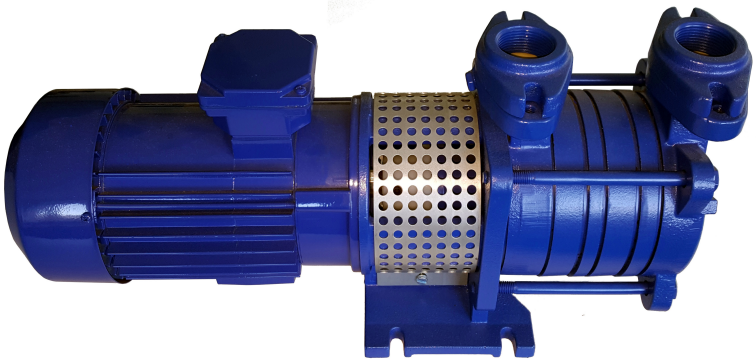

Side channel pump SK 32

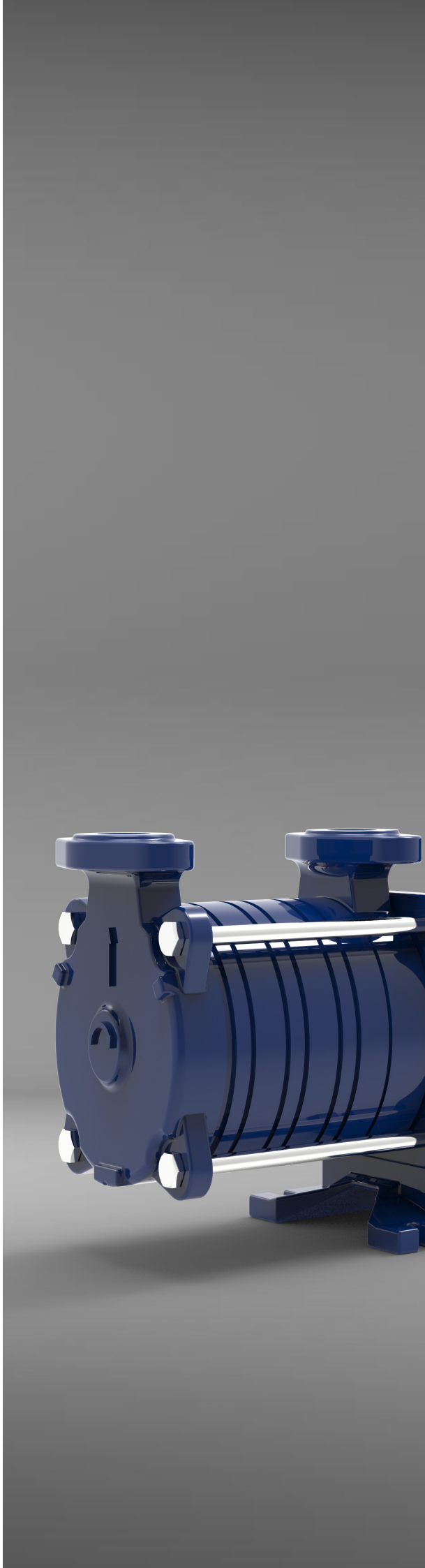

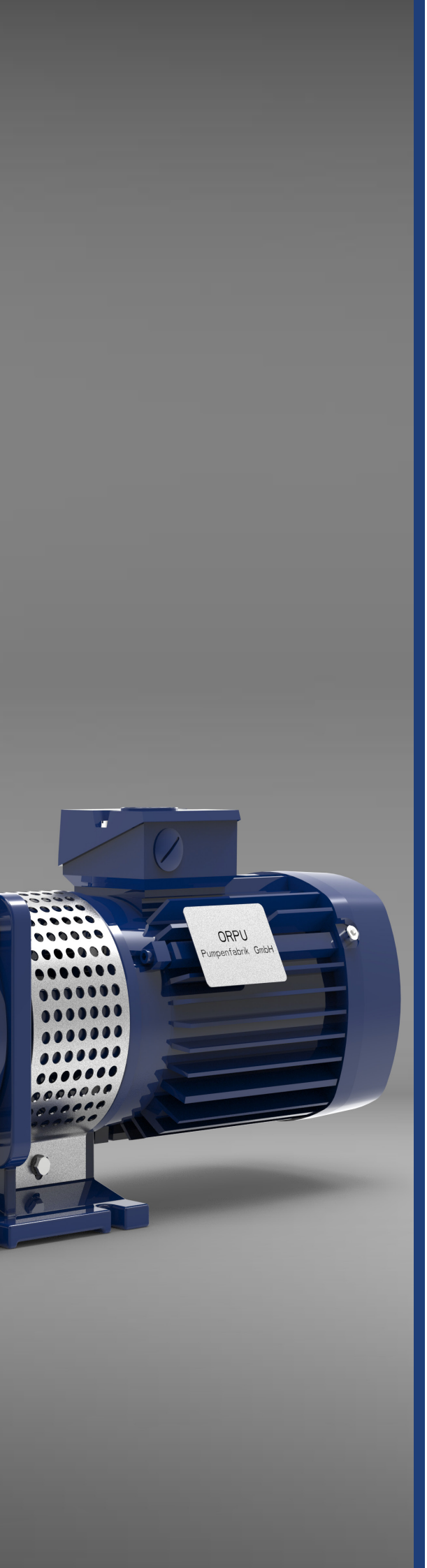

House water supply installations

FIELDS OF APPLICATIONS

- applicable in automatic house water supply installations
- irrigation of green areas
- delivery of clear and brakish water with no abrasive components in:
    - industry
    - agriculture
    - gardening
    - allotment gardens

ADVANTAGES

- automatic operation
- durable and low-maintenance
- constant operating conditions
- operating safety and reliability
- stable pump operation with self-priming side channel pump
- optimisation of the system due to application and customer request

DESIGN

- vessel available in different options: galvanised or stainless steel / with or without rubber membrane
- vessel volume up to 1,000 l
- hydraulic accumulator in vertical or horizontal position
- assembly of side channel pump SK 32 on horizontal pressure vessel
- or assembly right next to the upright standing vessel
- automatic operation through pressure control

Made in Germany

Sewage pumps
Submersible sewage pumps
Sewage lifting systems
Vacuum pumps
Side channel compressors
Submersible motor compressors
Side channel pumps
House water supply
Accessories

ORPU

ORPU
Pumpenfabrik GmbH
Am Heidering 3 A
16515 Oranienburg, Germany

Tel. +49 3301 858-0
Fax +49 3301 858-103

info@orpu.de
www.orpu.de